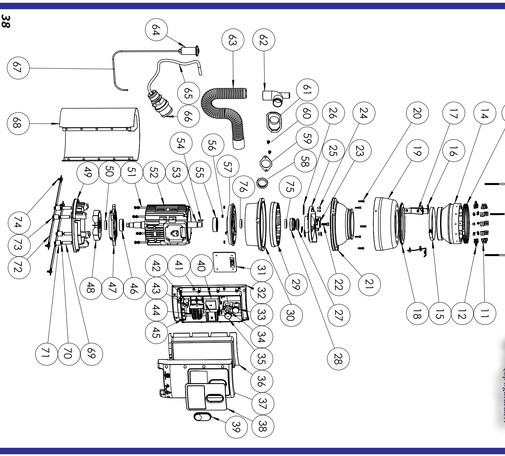

ST 315
SST 615 Marine
ST 315E
SST 615E Marine

-ST 315- ST 315 E- SST 615 Marine-SST 615E Marine

MODEL	RESİM NO	BARKOD NO	PARÇA ADI	PARÇA ADETİ
	1	8680023315123	160 EVYE EMNİYET ŞAPKASI	2
	2	8680023315149	SÜZGEÇ (160 EVYE) (OPSİYONEL)	1
	3	8680023315156	EVYE ALTI SIÇRATMA LAST.160 EVYE (OPS)	1
	4	8680023315163	BOĞAZ SACI (160 EVYE)	1
	5	8680023315170	SEKMAN (160 EVYE)	1
	6	8680023315187	BOĞAZ LASTİK CONTA (160 EVYE)	2
	7	8680023315194	BOĞAZ ÜÇGENİ (160 EVYE)	1
	8	8680023315194	SETİSKUR M8X20	5
	9	8680023315194	BOĞAZ KİLİT ÇEMBERİ 160 EVYE	1
	10	8680023315200	ASKI KANCASI 160 EVYE ALTI	3
	11	8680023315217	MAGNET 20X20X5 MM DELİKLİ	12
	12	8680023315224	MAGNET BAĞLANTI VİDASI	14
	13	8680023315231	KULE LASTİK KELEPÇESİ ÜST 160/180 W2	1
	14	8680023315248	ÇÖPMAK 3 KULE LASTİĞİ 160 EVYE	1
	15	8680023315255	KULE LASTİK KELEPÇESİ ALT 130/150 W4	1
	16	8680023315262	BOĞAZ ASKI SACI KANCALI 160 EVYE	3
	17	8680023315279	BOĞAZ ASKI SACI CIVATASI İMBUS	3
	18	8680023315286	KULE MUHAFAZA SACI KAPAMA LAST. 160	1
	19	8680023315293	KULE MUHAFAZA SACI 160	3
	20	8680023314203	KULE BAĞLANTI CİVATASI	5
	21	8680023314197	ÇÖPMAK 3 KULE	1
	22	8680023314234	İÇ BİÇAK CİVATASI M6 TERS DİŞ CR (6.5x30x3)	1
	23	8680023314265	ÇÖPMAK 3 ALT İLLET PERÇİNİ	6
	24	8680023314258	ÇÖPMAK 3 İÇ BİÇAK CR	1
	25	8680023314227	ÇÖPMAK 3 ALT İLLET	3
	26	8680023314357	MEKANİK SALMASTRA PORSELENİ	1
	27	8680023314289	MEKANİK SALMASTRA 31X52X57	1
	28	8680023314227	ÇÖPMAK 3 DİŞ BİÇAK CR	1
	29	8680023314302	ÇÖPMAK 3 ANA GÖVDE	1
	30	8680023314524	ELEKTRİK KUTU CONTASI	1
	31	8680023314739	ELEKTRİK KUTU GÖVDESİ	1
	32	8680023315095	SİNYAL LAMBASI YEŞİL 24 V	1
	33	8680023315101	TERMİK SWİTCH (MWH 33 JG) 2,2KW 400V	1
	34	8680023314517	SİNYAL LAMB. KİRMİZI 220 V SESLİ FLAŞÖR	1
	35	8680023314524	ELEKTRİK KUTU CONTASI	1
	37	8680023314531	ELEKTRİK KUTU KAPAĞI	1
	38	8680023314555	ETİKET PLAKASI AL	1
	39	8680023314562	SİNYAL LAMBASI/TERMİK ŞEFFAF SİLİKONU	1
	40	8680023315309	KUMANDA TRAFOSU 400/26V 30VA	1
	40*	8680023315118	KUMANDA TRAFOSU 450/26V 30VA	1
	41	8680023315125	KONTAKTÖR LC1K1210B7 24V	1
	42	8680023314746	PNOMATİK ANAHTAR	1
	43	8680023315475	KLEMENS SİGORTA ASK 2 S GRİ	2
	44	8680023314760	KLEMENS AVK 4	4
	45	8680023315316	KABLO SABİTLEME SACI	1
	46	8680023314630	ARKA BULMAN 6205 ZZ	1
	47	8680023314647	ARKA KAPAK	1
	48	8680023314654	MOTOR SOĞUTMA FANI	1
	49	8680023314661	MOTOR SOĞUTMA FAN KAPAĞI	1
	50	8680023315323	MOTOR ARKA KAPAK KEÇESİ 25X40X7	1
	51	8680023314623	MOTOR BAĞLANTI SAPLAMASI	4
	52	8680023315095	MOTOR GÖVDESİ (STATÖR 2,2 KW TRİFAZE)	1
	53	8680023315108	MOTOR MİLİ (ROTOR 2,2 KW TRİFAZE)	1
	54	8680023314432	KAMA	1
	55	8680023314456	ÖN RULMAN 6305 ZZ	1
	56	8680023314340	SOMUN M6 A2	12
	57	8680023314326	MOTOR ÖN KAPAK CR	1
	58	8680023314364	ÇIKIŞ DİRSEK CONTASI	1
	59	8680023314371	ÇIKIŞ DİRSEK KELEPÇESİ	1
	60	8680023314388	ÇIKIŞ DİRSEK CIVATASI M6X15 YILDIZ A2	2
	61	8680023314395	ÇIKIŞ DİRSEGİ SAC KAPAMA CONTASI	1
	62	8680023314401	ÇIKIŞ DİRSEGİ	1
	63	8680023314418	PLASTİK GİDER BORUSU	1
	64	8680023314609	PNOMATİK ANAHTAR BUTONU	1
	65	8680023315330	BESLEME KABLOSU 5X1.5MM	2M
	66	8680023315347	DÜZ FİŞ (PLUG 16A 5P 6H 3P+N+TOPRAK)	1
	67	8680023314616	PNOMATİK ANAHTAR SİLİKON HORTUMU (	1
	68	8680023314425	PASLANMAZ ÇEVRE SACI	1
	69*	8680023314678	UZATMA SOMUN CR M6 10X50	4
	70*	8680023315354	SETİSKUR M6X15	4
	71*	8680023314685	ŞOK TAKOZU 20X20 M6	4
	72*	8680023314692	DENİZ BAĞ (MAKİNE SABİTLEME SACI)	2
	73*	8680023314708	CİVATA 6KÖŞE M6X10 A2	4
	74*	8680023314920	CİVATA 6KÖŞE M6X20 A2	4
	75	8680023314319	KEÇE 25X35X7	1
	76	8680023314319	KEÇE 25X35X7	1

* İŞARETLİ PARÇALAR SS 415 MARİNE MODELİNDE KULLANILMAKTADIR

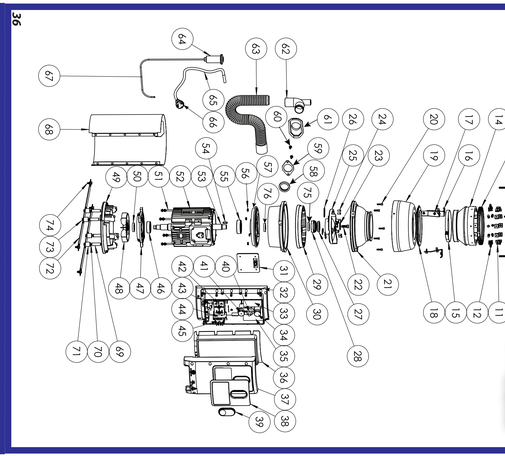

SM 215
SSM 415 Marine
SSM 215E
SSM 415E Marine

SM 215-SSM 415 Marine- SSM 215E-SSM 415E Marine

MODEL	RESİM NO	BARKOD NO	PARÇA ADI	PARÇA ADETİ
	1	8680023315123	160 EVYE EMNİYET ŞAPKASI	1
	2	8680023315149	SÜZGEÇ (160 EVYE) (OPSİYONEL)	1
	3	8680023315156	EVYE ALTI SIÇRATMA LASTİĞİ 160	1
	4	8680023315163	BOĞAZ SACI (160 EVYE)	1
	5	8680023315170	ŞEKMAN (160 EVYE)	1
	6	8680023315187	BOĞAZ LASTİK CONTA (160 EVYE	2
	7	8680023315194	BOĞAZ ÜÇGENİ (160 EVYE)	1
	8	8680023315194	SETİSKUR M8X20	5
	9	8680023315194	BOĞAZ KİLİT ÇEMBERİ 160 EVYE	1
	10	8680023315200	ASKI KANCASI 160 EVYE	3
	11	8680023315217	MAGNET 20X20X5 MM DELİKLİ	12
	12	8680023315224	MAGNET BAĞLANTI VİDASI M5X9 YILDIZ	12
	13	8680023315231	KULE LASTİK KELEPÇESİ ÜST 160/180 W2	1
	14	8680023315248	ÇÖPMAK 3 KULE LASTİĞİ 160 EVYE	1
	15	8680023315255	KULE LASTİK KELEPÇESİ ALT 130/150 W4	1
	16	8680023315262	BOĞAZ ASKI SACI KANCALI 160 EVYE	3
	17	8680023315279	BOĞAZ ASKI SACI CİVATASI İMBUS	3
	18	8680023315286	KULE MUHAFAZA SACI LAST. 160	1
	19	8680023315293	KULE MUHAFAZA SACI PASLANMAZ 160	3
	20	8680023314203	KULE BAĞLANTI CİVATASI M5X25 A2	5
	21	8680023314197	ÇÖPMAK 3 KULE	1
	22	8680023314234	İÇ BİÇAK CİVATASI M6 TERS DİŞ CR	1
	23	8680023314234	İÇ BİÇAK CİVATA PULU M6 CR (6.5x30x3)	1
	24	8680023314265	ÇÖPMAK 3 ALT İLLET PERÇİNİ	6
	25	8680023314258	ÇÖPMAK 3 İÇ BİÇAK CR	1
	26	8680023314227	ÇÖPMAK 3 ALT İLLET	3
	27	8680023314357	MEKANİK SALMASTRA PORSELENİ	1
	28	8680023314289	MEKANİK SALMASTRA 31X52X57	1
	29	8680023314227	ÇÖPMAK 3 DİŞ BİÇAK CR	1
	30	8680023314302	ÇÖPMAK 3 ANA GÖVDE	1
	31	8680023314524	ELEKTRİK KUTU CONTASI	1
	32	8680023314739	ELEKTRİK KUTU GÖVDESİ	1
	33	8680023314470	KONDANSATÖR 333MF 250 V	1
	34	8680023314494	SİNYAL LAMBASI YEŞİL 220 V	1
	35	8680023314500	KONDANSATÖR 40MF 425 VAC (OPS.)	1
	36	8680023314524	ELEKTRİK KUTU CONTASI	1
	37	8680023314531	ELEKTRİK KUTU KAPAĞI	1
	38	8680023314555	ETİKET PLAKASI AL	1
	39	8680023314562	SİNYAL LAMBASI/TERMİK ŞEFFAF SİLİKONU	1
	40	8680023314488	TERMİK SWİTCH (MEH 18 JD) 230V 1,5KW	1
	41	8680023314517	SİNYAL LAMB. KİRMİZI 220 V SESLİ FLAŞOR	1
	42	8680023314715	İLK HAREKET ROLESİ	1
	43	8680023314746	PNOMATİK ANAHTAR	1
	44	8680023314753	KLEMENS SİGORTA ASK 2 S GRİ	1
	45	8680023314760	KLEMENS AVK 4	2
	46	8680023314630	ARKA RULMAN 6205 ZZ	1
	47	8680023314647	ARKA KAPAK	1
	48	8680023314654	MOTOR SOĞUTMA FANI	1
	49	8680023314661	ÇÖPMAK 3 PLASTİK SOĞUTMA FAN KAP.	1
	50	8680023315323	MOTOR ARKA KAPAK KEÇESİ 25X40X7	1
	51	8680023314623	MOTOR BAĞLANTI SAPLAMASI M6	4
	52	8680023314593	MOTOR GÖVDESİ (STATÖR 1,5 KW MON.	1
	53	8680023314449	MOTOR MİLİ (ROTOR 1,5 KW MONOFAZE)	1
	54	8680023314432	KAMA	1
	55	8680023314456	ÖN RULMAN 6305 ZZ	1
	56	8680023314340	SOMUN M6 A2	12
	57	8680023314326	MOTOR ÖN KAPAK CR	1
	58	8680023314364	ÇIKIŞ DİRSEK CONTASI	1
	59	8680023314371	ÇIKIŞ DİRSEK KELEPÇESİ	1
	60	8680023314388	ÇIKIŞ DİRSEK CİVATASI M6X15 YILDIZ A2	2
	61	8680023314395	ÇIKIŞ DİRSEGİ SAC KAPAMA CONTASI	1
	62	8680023314401	ÇIKIŞ DİRSEGİ	1
	63	8680023314418	PLASTİK GİDER BORUSU	1
	64	8680023314609	PNOMATİK ANAHTAR BUTONU	1
	65	8680023314616	BESLEME KABLOSU 3X2,5	2M
	66	8680023314557	KAUÇUK FİŞ (EGİDE 1X16)	1
	67	8680023314616	PNOMATİK ANAHTAR SİLİKON HORTUMU	1
	68	8680023314425	PASLANMAZ ÇEVRE SACI	1
	69*	8680023314678	UZATMA SOMUN CR M6 10X50	4
	70*	8680023315354	SETİSKUR M6X15	4
	71*	8680023314685	ŞOK TAKOZU 20X20 M6	4
	72*	8680023314692	DENİZ BAĞ (MAKİNE SABİTLEME SACI)	2
	73*	8680023314708	CİVATA 6KÖŞE M6X10 A2	4
	74*	8680023314920	CİVATA 6KÖŞE M6X20 A2	4
	75	8680023314319	KEÇE 25X35X7	1
	76	8680023314319	KEÇE 25X35X7	1

* İŞARETLİ PARÇALAR SM 215 MARİNE MODELİNDE KULLANILMAKTADIR